Child Nutrition Labeling Program

United States Department of Agriculture

Marketing and Regulatory Program

Agricultural Marketing Service

Fruit and Vegetable Program

Processed Products Division

AIM Instructional System

Inspection Series

July 2012

Child Nutrition Labeling Program
Table of Contents

Introduction 1
Guide for Electronic Usage 1
Memorandum of Understanding (MOU) 2
Inspection of Non-Meat Child Nutrition Products 2
Application and Agreement for Verification Service 6
Quality Control Verification Program (QCVP) 7
In-Plant Monitoring Program (IMP) 11
Charges 14
Mixed Services 14
Inspection of 50 Percent Juice Drinks and Juice Drink Products 15
FDA Regulations for Minimum Single Strength Juice Brix Values 17
Ice Water Displacement (Fluid Measure) 25
Samples and records to Washington 27

INTRODUCTION

These instructions are designed for Processed Products Division (PPD) employees of the U.S. Department of Agriculture (USDA). The purpose is to establish procedures for verification services used to determine product compliance for the Child Nutrition (CN) Labeling Program. The procedures contained in these instructions are an integral part of Division services. If needed, contact your immediate supervisor for any situation not addressed in these instructions.

These instructions contain links to various internal and external sources of information. For inspection personnel without internet or intranet access, please contact your immediate supervisor to obtain hard copies of documents as needed.

GUIDE FOR ELECTRONIC USAGE

The Administrative, Inspection, and Management (AIM) System of instructional manuals is available electronically in Adobe Acrobat Portable Document Format (PDF) at the following intranet address: http://agnis/sites/FV/PPB/AIM/default.aspx.

When accessed electronically, AIM materials have hyperlinks and hypertext (visible as underlined blue text) available to the PDF user. Clicking on a hyperlink takes the reader to a web site with information relating to the subject. Hypertext will link the reader to a different page within the current manual - or even a different manual - with information relating to the subject. For example, the hypertext in the Table of Contents allows a reader to go directly to the section of interest in the manual by clicking on the section title within the Table of Contents.

PDF offers a variety of tools depending on the Adobe version the reader has. The newer the version, the more tools available. To learn about the variety of PDF search options available:

- Click on the “Help” tab on the top of this page,
- Then click on the “Adobe Acrobat Help” bar,
- Type the word “Search” in the “Search” box, and click on the “Search” button,
- A series of options will become available,
- Click on the “Access Search Features” link and follow the instructions for the type of search you are interested in.

This document format allows a PDF user to easily search for content within a document, or within multiple documents.

MEMORANDUM OF UNDERSTANDING (MOU)
Between The USDA Food and Nutrition Service (FNS) and the USDA Agricultural Marketing Service (AMS) and the USDA Food Safety and Inspection Service (FSIS) and the Department of Commerce (USDC) National Marine Fisheries Service (NMFS)
October 15, 2009.

The objective of the memorandum is to identify each agency's responsibility in carrying out their respective services for the CN Labeling Program. In addition, it is each agency's responsibility to ensure that the CN label on the end-product meets the policies and regulations set forth by FNS. (See Appendix C in the Regulations, 7 CFR § 210, 220, 225 and 226, which may be found at the following internet address: http://www.gpo.gov/fdsys/browse/collectionCfr.action?collectionCode=CFR). The MOU may be found on the FNS, CN Labeling Program site at the following internet address under the "General Background" link: http://www.fns.usda.gov/cnd/cnlabeling/default.htm.

INSPECTION OF NON-MEAT CHILD NUTRITION PRODUCTS

These instructions provide supplemental information for the inspection of non-meat CN products. The AMS and the NMFS have been working together to provide a unified approach to the CN Label program. As a result, AMS/NMFS have prepared several documents to assist industry in developing Quality Control (QC) Program, and to outline how the Program and their implementation will be evaluated.

The following documents contain procedures and checklists to be used in conjunction with these instructions:

- Industry Guidelines for Preparation of Quality Control Program;
- Standard Operating Procedure for Submitting and Approving Quality Control Program;
- Quality Control Program Review Checklist;
- Standard Operating Procedure for Verification Services for Child Nutrition Labeled Products; and
- CN Plant Monitoring Review Checklist.

These documents are the **primary** source of information for the inspection of CN labeled product, and will be referenced in these instructions. Since they are subject to change (updates) as necessary, copies of them are not included in these instructions. **If there is a discrepancy between information in the documents referenced above and the information in these instructions, the above listed documents will take precedence.**

The latest version of these documents must be used with these instructions. The documents are available electronically on the AMS SharePoint, PPD site at the following intranet address: http://agnis/sites/FV/PPD/CNLabel/default.aspx.

The FNS Child Nutrition Labeling for Non-Meat Products manual may be found at the following internet address: http://www.fns.usda.gov/cnd/Guidance/CN_Labeling.pdf.

Products produced in accordance with the CN Labeling Program are generally purchased by foodservice providers for FNS meal Program. The USDA CN Labeling Program allows food manufacturers the option to include a standardized food crediting statement on their product label. Labels must be approved by USDA, AMS prior to use.

In addition, FNS requires that all manufacturers participating in the program have a Quality Control (QC) program and a quantitative control (inspection) program for all major product ingredients contributing toward the meal pattern for CN products. The nature of the product will influence how the inspection program is carried out. For example, some products may be batch formulated, requiring verification of ingredient weights before mixing, such as sauces, dough fillings, or fritters. Non-formulated products such as pizzas and sandwiches will have component weights determined during various stages of production.

PPD is responsible for coordinating and supervising inspection activities for products produced under the CN labeling program other than meat, poultry, or seafood. Applicants must complete and sign an "Application and Agreement for Verification Service" - shown at the end of this section. AMS will verify the implementation of the manufacturer's CN QC program, and provide inspection oversight of CN product. There are two options to determine product compliance - the Quality Control Verification Program (QCVP), or the In-plant Monitoring Program (IMP), or a combination of the two.

Initial Procedures

A. Label applications and review procedures

Manufacturers are required to submit label applications to AMS label reviewers for approval. With their label application, manufacturers will need to include the cover sheet of the "CN Quality Control Program Review Checklist," indicating an approved QC program. Without an AMS approved CN QC program and FINAL approval on the labels, the product will not be eligible for the CN Labeling Program.

The label and label application form with product formulation are returned to the manufacturer after approval.

B. Plant survey and sanitation

1. Establishments Covered by FSIS

Many CN labeled products are produced in processing plants with FSIS inspection. Although FSIS may be present in the facility, they will NOT be performing any inspection services for the CN program. Manufacturer compliance with the FNS CN label program under QCVP and/or IMP will be determined by PPD, not FSIS.

a. Plant survey.

If the plant is a meat establishment covered by FSIS, a plant survey is not required. However, the inspector will need to obtain a copy of the plant's FSIS Grant of Inspection.

b. Plant sanitation.

For plants under IMP, the inspector shall perform sanitation inspections and complete appropriate sanitation score sheets. Sanitation deficiencies **shall** be reported to the FSIS inspector present in the plant. If the deficiency is in an area covered by FSIS, FSIS assumes the responsibility for notifying management and monitoring corrective action. If the deficiency is in an area not covered by FSIS, PPD is responsible for notifying management and monitoring corrective action.

2. Establishments Not Covered by FSIS

a. Plant survey.

If the plant is not covered by FSIS, a plant survey is required. The plant must meet the requirements of the plant survey before the production of any CN labeled product, and before inspection service can be provided.

b. Plant sanitation.

For plants under IMP, the PPD inspector shall perform sanitation inspections and complete appropriate sanitation score sheets. The PPD inspector will be responsible for notifying management of findings and monitoring corrective action.

C. Processor's Quality Control Program

A written and approved QC program is required for all CN labeled products. An acceptable QC program is one that establishes effective controls for each product produced. The applicant will develop a quality control program in accordance with Industry Guidelines for Preparation of Quality Control Program established by AMS/NMFS.

If a manufacturer utilizes USDA inspection as part of their QC program, the USDA inspection must be identified and described in the written QC plan. A written plan is required even if the manufacturer uses USDA inspection for all of their QC functions.

The QC program will be submitted to the area Officer-In-Charge (OIC) for review and approval using the AMS/NMFS approved "Quality Control Program Review Checklist." All submitted QC Program will be assessed. The status of their QC program approval or information on the changes necessary for acceptance will be provided to the manufacturer within 10 business days.

All acceptable QC Program will be signed, dated, and stamped "Approved" on each page of the QC document by the OIC. Copies of the QC program are NOT retained by the AMS office. The approved QC program will be returned to the manufacturer, including the coversheet of the QC checklist indicating approval. The manufacturer shall attach a copy of this coversheet to all CN label applications submitted to AMS/FNS label reviewers.

Because PPD does not retain a copy of the approved QC Program, the inspector must request a copy to reference during the review or inspection visit.

APPLICATION AND AGREEMENT FOR VERIFICATION SERVICE

I (We) _____, located at _____, hereinafter referred to as the applicant, hereby, make application for acceptance service at the following plant(s) and on the following child nutrition (CN) nonmeat labeled product(s):

_____
_____
_____
_____

In accordance with the Regulations Governing Inspection and Certification of Processed Fruits and Vegetables and Related Products and such instructions covering the inspection of child nutrition products under an acceptable quality control program, the Processed Products Division, Fruit and Vegetable Program, Agricultural Marketing Service will perform verification service for nonmeat CN labeled products. In addition, the applicant agrees to the following conditions:

1. To develop an acceptable quality control program for each product and submit the program to the inspection service for approval prior to production. A guideline is attached to assist in preparing a program.
2. To submit all labels to AMS label reviewers for approval. Labels must bear the CN logo and FNS official and the nonmeat inspection identification mark.

The above conditions must be satisfied before the Processed Products Division, Fruit and Vegetable Program will perform verification service.

This agreement will be in effect for one year from the date shown unless terminated prior to this by mutual consent or at any time acting pursuant to any applicable laws, rules, or regulations debarring the applicant from receiving any further benefits of this service.

This application when approved shall constitute an agreement between the undersigned and the inspection service in accordance with the terms and conditions provided herein.

APPROVED:	**APPROVED:**
_____ Name of Applicant	_____ U.S. Department of Agriculture Agricultural Marketing Service Fruit and Vegetable Program
_____ By (signature)	_____ By (signature)
_____ Print Name	_____ Print Name
_____ TITLE	_____ TITLE
_____ DATE	_____ DATE

CN INSPECTION REQUIREMENTS

Quality Control Verification Program (QCVP)

QCVP can be used as one approach to satisfy the inspection requirements for CN products. This type of service will begin only after the processor's QC program has been approved, and AMS has provided final approval for the respective label(s).

A plant survey is not required when the plant is a meat or poultry establishment covered by FSIS.

When a firm produces CN product on an intermittent basis, the inspection office will require that the processor provide a production schedule at least one week in advance. The advance schedule will allow the supervisor to have a timetable planned for unannounced on-site visits.

A. Division Verification Procedures

Details of the verification procedures can be found in the document titled "Standard Operating Procedure for Verification Services for Child Nutrition Labeled Products." Verification procedures are summarized as follows:

1. Verify processor's quality control results by auditing the plant's records.

2. Review processor's quality control documents for conformance with program guidelines, and assurance that appropriate corrective action is taken for any noted deviations.

3. Draw and evaluate official samples from warehouse lots for comparison with processor's quality control records. If samples are not available for evaluation, the monitoring review report/checklist should indicate not available (N/A) and state the reason why.

4. Verify the processor's ability to produce clean, sound, wholesome food by examining the condition of ingredients and finished product, reviewing sanitation, and by observing manufacturing practices.

B. Implementation of Verification Program

1. Initial validation assessment of the quality control program.

   Upon acceptance of the quality control program and approval of the CN label(s), the manufacturer may start production of CN labeled products. The supervisor or inspector will perform a thorough evaluation or an "initial validation assessment" of CN production to determine the plant's ability to implement processing and monitoring procedures as outlined in their QC manual. The initial validation assessment is based on the new

checklist and Standard Operating Procedure (SOP) in order to give the plant an initial "rating".

2. Division responsibilities after the initial assessment.

Procedures and timelines for performing reviews under the QCVP and IMP are found in the AMS/NMFS document titled "Standard Operating Procedure for Verification Services for Child Nutrition Labeled Products." The results of the review will be documented on the AMS/NMFS "CN Plant Monitoring Review Checklist" which can be found on the AMS SharePoint, PPD site at the following intranet address: http://agnis/sites/FV/PPD/CNLabel/default.aspx.

C. Facility rating system

The AMS or NMFS representative will assign manufacturers a facility rating after each CN product review for both verification services (QCVP or IMP). A manufacturer's rating is based on their ability to implement processing and monitoring procedures as outlined in their QC manual. The rating system is outlined in the Standard Operating Procedure for Verification Services for Child Nutrition Labeled Products, and the CN Plant Monitoring Review Checklist.

D. Review frequency

Manufacturers participating in either type of verification services (QCVP or IMP) will initially undergo CN product reviews at a "normal" frequency level. QCVP plants are required to have a minimum of four unannounced reviews per year (one per quarter). Manufacturers that do not produce CN labeled product(s) quarterly are required to have a minimum of two product reviews per year. The number of reviews may increase or decrease based on the manufacturer's facility rating/performance. Review frequency is outlined in the Standard Operating Procedure for Verification Services for Child Nutrition Labeled Products, and the CN Plant Monitoring Review Checklist.

E. Unsatisfactory facility rating

Manufacturers who receive a "conditional" facility rating due to a critical non-conformance must document corrective actions and submit responses in writing within five business days to the appropriate AMS or NMFS representative. The AMS/NMFS representative will verify corrective actions, which may include a follow-up visit to confirm that corrective actions were implemented. Failure by a firm to respond and correct critical non-conformances within the allotted time will result in an unsatisfactory facility rating.

Manufacturers who receive an "unsatisfactory" facility rating must document corrective actions and submit responses in writing within five business days to the

appropriate AMS or NMFS representative. The facility will be subject to a follow-up visit, and a full CN product and system review will be conducted. If the follow-up visit results in a "conditional" facility rating, the manufacturer will be placed on tightened frequency until the facility receives a satisfactory rating. If a follow-up visit again results in an "unsatisfactory" facility rating, FNS will be notified. FNS will coordinate with the AMS CN Labeling Operations Office and take appropriate actions, which may include rescinding CN label(s), submitting the manufacturer name to FNS regional and state offices for labeling violations, or removing the manufacturer from the CN Labeling Program.

It is the responsibility of the manufacturer to halt production, divert product to non-CN use, or restrict shipment of product when a critical non-conformance is detected. The manufacturer will be permitted to continue CN production after appropriate corrective actions are implemented and confirmed by an AMS or NMFS representative. Normal review frequency will resume after the facility receives a satisfactory facility rating.

F. Applicant's responsibilities

Under the verification program, responsibilities of the applicant are as follows:

1. Enter into an agreement with the area field office supervisor for verification service.

2. Comply with Food and Drug Administration "Current Good Manufacturing Practice" regulations to produce clean, sound, wholesome products.

3. Prior to production, develop and submit an acceptable quality control program with adequate controls and appropriate corrective measures.

4. Train and supervise employees who make quantitative checks; perform ingredient and finished product checks for wholesomeness; and verify compliance with the manufacturer's QC procedures, and other evaluations.

5. Maintain quality control records, production reports, approved CN labels, and supplier affidavits (certificates) covering product components, and make all items available to the PPD inspector.

6. Provide AMS or NMFS representative advance notice of CN production schedule.

7. Allow AMS or NMFS representatives into establishment(s) to perform the CN product review.

8. Provide a copy of approved QC program to an AMS or NMFS representative upon request.

9. Provide AMS and NMFS representatives any QC records generated as part of the CN Labeling program upon request.

10. Implement and document corrective actions for all cited critical and non-critical non-conformances.

11. Halt production and/or restrict shipment of CN labeled product, or divert product to non-CN use if specifications are not met as written in the approved QC program.

In-Plant Monitoring Program (IMP)

IMP is another approach to the CN inspection program. This type of service utilizes USDA in-plant inspection to monitor plant production of CN labeled products, and to perform QC inspections of the product.

It is possible to combine the two inspection services by having the manufacturer perform some QC functions under QCVP while a USDA in-plant inspector performs other QC inspections under IMP.

A. AMS responsibilities under IMP

1. Perform sanitation inspections and complete appropriate sanitation score sheets. If an FSIS inspector is present in the plant, and he/she is responsible for the area where items are prepared, sanitation deficiencies shall be reported to the FSIS inspector. FSIS then assumes the responsibility for notifying management and monitoring corrective action. If the deficiency is in an area not covered by FSIS, PPD is responsible for notifying management and monitoring corrective action.

2. Examine product ingredients for wholesomeness. Perform sensory and visual examination. Apply applicable Food and Drug Administration defect action levels.

3. Check and observe product formulation. Verify major ingredient raw and finished product weights for compliance with the CN label statement.

   A lot that fails the meal pattern of a specific CN label may be diverted to other CN labeled product if it meets the CN requirements of the other label. When rejected lots cannot be diverted to other CN product, the inspector must be present to monitor the removal of the CN label. In some cases, FNS may agree to negotiate acceptance of the product.

4. Perform periodic reviews of the plant and complete a CN Plant Monitoring Review Checklist which can be found on the AMS SharePoint, PPD site at the following intranet address: http://agnis/sites/FV/PPD/CNLabel/default.aspx. The review will be performed using the same criteria (procedures, rating, frequency, etc.) as plants under QCVP. It will be based on the plant's QC plan and will cover the procedures that are not performed by the in-plant inspector. Procedures that are performed by the in-plant inspector will be documented as "N/A" on the review checklist.

B. Product inspection

When a USDA inspector performs the QC inspections, use the following procedures for determining compliance with CN label requirements.

1. Formulation Verification

Generally, CN labeled products are made by mixing two or more ingredients in batches. Some CN end items are produced with a single formulated mixture that is formed or extruded into serving-size portions, such as a vegetable based burger or meatball. Some products are made by mixing batches of different types of ingredients to produce the individual parts that are assembled into the finished item, such as the sauce and dough for a pizza.

During production of a CN labeled product, the manufacturer must use and follow the approved formulation, previously reviewed and approved by USDA as part of the CN label approval process. During a production shift, the inspector monitors the complete formulation and blending of at least one batch, and should periodically review and monitor the batching process throughout the shift. When observing production, the inspector should perform a verification of all major ingredient weights before blending. Major ingredients are defined as any ingredient that contributes towards the meal pattern requirements.

For the product to be considered in compliance, the weight of each major ingredient shall not differ from the required weight by more than 0.5 percent. Products produced from a batch found to be out of compliance will be rejected.

2. Portion control checks

The inspector performs various product weight checks to verify that the contributions stated on the CN label are met. This may require checking the weights of the components as well as the weight of the finished product.

For products made of various components, each component that contributes to the meal pattern requirements will need to be checked. For some products, it is possible to separate out individual components from the finished product. However, for many products, the weight of the components must be checked during various stages of production.

Some CN items do not have components, such as a vegetable based burger or meatball. For these items, in addition to verifying the formulation the raw weights and finished weights of the product need to be checked.

The subgroup sample size should be a minimum of five servings as stated in the CN logo on the label. The sample size and frequency are the same for both component weight checks and finished item checks.

Examples:

For meatballs: If the CN logo states a serving size is three meatballs, a subgroup would be five servings of three meatballs each, or 15 meatballs. Since a meatball does not have any components, these weight checks are performed on both the raw and finished product.

For cheese ravioli: If the CN logo states a serving size is two raviolis, a subgroup would be five servings of two raviolis each, or 10 raviolis. If the CN label states that the ravioli provides a meat equivalent (protein from the cheese), one subgroup (10 raviolis) would need to be checked for the weight of the filling. Additionally, one subgroup (10 raviolis) would need to be checked for the weight of the finished product.

For cheese pizza: If the CN logo states a serving size is one pizza, a subgroup would be five servings of one pizza each, or 5 pizzas. If the CN label states that the pizza provides a meat equivalent (protein from the cheese), and a bread serving (the crust), one subgroup (5 pizzas) would need to be checked for the weight of the cheese, and one subgroup (5 pizzas) would need to be checked for the weight of the crust. Another subgroup (5 pizzas) would need to be checked for the weight of the finished product.

The sample size and frequency may be based on the rate of plant production. Samples should be pulled at a minimum of one subgroup per hour. A minimum of 3 subgroups per lot is required, regardless of the lot size or duration of production. Manufacturers who are not able to meet the minimum required subgroup sample size and frequency may contact the approving official to request a waiver. The approving official will coordinate with the AMS, CN Labeling Program Operation Office to determine the adequacy of the proposed subgroup sampling size and frequency.

Production would be considered as <u>failing FNS requirements</u> under the following conditions:

The lot average net weight is less than specified on the label, or
The average weight of any single subgroup size varies as follows:

Subgroup Sample size	5 to 7	8 and over
Weight range tolerance	minimum 10 percent	minimum 8 percent

Minimum weight ranges tolerance must be monitored for each component (e.g., breading component, sauce component, filling component, crust component, etc.), regardless of how many components are being used. Monitoring the maximum weight range tolerance is recommended, but is not required.

Charges

For plants under QCVP, there will be a verification service fee in accordance with the "PPD Fee for Audit, Survey, and Verification Program that are not covered by other Fee Announcements", which may be found on the USDA, PPD home page under PPD News at the following internet address: http://www.ams.usda.gov/AMSv1.0/processedinspection. This fee is charged for the review of the manufacturer's written QC plan and for review(s) of a plant's performance under the program. The verification service fee is charged for the actual time spent for the review, plus travel time to and from the facility. The applicant is **not** charged for expenses such as mileage and per diem.

For plants under IMP, the fee will be at the regular AMS or NMFS in-plant inspection rate.

Mixed Services

Manufacturers have the option to select which CN Inspection Program to use. Those receiving in-plant inspection services for non-CN product may opt to use either QCVP or IMP for their CN product. They are not required to participate in the IMP option because they already have in-plant inspection. The in-plant grader can monitor production of CN labeled products for compliance with CN Labeling requirements under the QCVP or the IMP program, whichever program the plant has elected to use.

For example, a plant produces canned refried beans and bean burritos. It has a USDA "School Lunch" contract for the canned refried beans, and also produces burritos with a CN label. The plant could have contracted In-Plant, Designated Lot inspection for the canned refried beans. However simply because they are required to have an in-plant inspector for the beans does not mean they must use the in-plant monitoring system (IMP) for their CN labeled product. They may opt to implement a QCVP.

PPD will strive to provide services in the most cost-effective manner. Under the circumstances above, the cost of QCVP service depends upon the in-plant inspector's responsibilities. If the QCVP quarterly review can be done without interfering with the in-plant inspector's regular duties, and can be performed during the normally scheduled hours, there would be no additional charge for the service. However, if the CN review extends beyond the inspector's normal tour of duty, or if an additional inspector must be called in to perform CN product review, the plant will incur additional charges.

INSPECTION OF 50 PERCENT JUICE DRINKS AND JUICE DRINK PRODUCTS

Purchasing agents for school districts throughout the country have been authorized by the FNS to purchase various 50 percent juice drinks and juice drink products, such as sherbet, yogurt, juice bars, and beverage base for use in their school lunch feeding Program. **Purchases will require in-plant inspection to determine compliance with FNS CN meal pattern 50 percent juice program**.

Manufacturers are required to submit label applications to AMS label reviewers for approval. The label and label application form with product formulation are returned to the manufacturer after approval.

Juice plants are exempt from the CN Quality Control Program requirements because-CN inspection for these products is performed in-plant. Fees for CN labeled 50 percent juice and juice products will be charged at the regular in-plant inspection rate.

The FNS Child Nutrition Labeling for Juice Drinks and Juice Drink Products manual may be found at the following internet address: http://www.fns.usda.gov/cnd/cnlabeling/juiceman.pdf.

PPD Responsibilities – 50% Juice Program

The in-plant inspector(s) will be responsible for the following:

A. Performing sanitation inspections and completing appropriate sanitation score sheets.

B. Inspecting incoming product materials for wholesomeness before their use;

C. Checking and verifying ingredients and product formulations for compliance with label statements; and

D. Checking the quality and non-quality factors of the finished products according to established procedures.

Wholesomeness of product materials

Plant management is responsible for providing a copy of certificates or score sheets that cover components from previously inspected lots. Unless components are previously inspected, all product materials require wholesomeness inspections, and must be analyzed using the methods of analysis (such as light filth, heavy filth, mold determinations) indicated in the AIM Inspection Series, Foreign Material Manual. Previously inspected products and all components not covered by a Defect Action Level require visual and/or sensory examination to verify that the ingredient is in good condition. These analyses and/or examinations are to be accomplished prior to the use of these materials in the finished product. The sampling rate for wholesomeness and product condition inspections shall be in accordance with Table I of the AIM Inspection Series, Foreign Material Manual for lot inspection.

Verification of product formulation

CN labeled juice products require in-plant inspection to verify that the product produced meets the declared ounces of creditable single strength juice shown in the CN logo statement. The information needed to determine compliance with the 50 percent juice program is as follows:

A. FDA's recognized minimum single strength Brix value of the specific juice being used.

The FDA has established single strength Brix values as part of their Nutritional Labeling and Education Act regulations. The Brix values shown in the following "FDA Regulations for Minimum Single Strength Juice Brix Values" table shall be used to determine compliance with FNS Child Nutrition 50 percent juice program. This value is used to determine the "fold" of natural concentrate and the number of gallons of natural juice available.

B. The Brix value of the concentrated juice(s) used in making the product (concentrated juice drink).

This is the Brix value of the fruit juice concentrate with no sugar or other additives.

C. The pounds of concentrated juice(s) used in making the product.

The number of pounds and Brix of the concentrate are used to calculate the number of gallons of concentrate. Measuring by weight is the accepted procedure; measuring ingredients by volume is much less precise and could result in an extremely wide variation in final natural juice content.

D. The total gallons of concentrated drink base made from the above natural juice concentrate.

This is the size of the batch mixed. It includes all of the ingredients used in making the final product. This figure should be provided by the applicant and verified by converting the number of cases produced to gallons from that batch.

E. The label statement.

This statement will give you the mixing directions for the product, amount of creditable juice, and other vital information.

FDA REGULATIONS FOR MINIMUM SINGLE STRENGTH JUICE BRIX VALUES

Juice	100 percent juice [1/]	Juice	100 percent juice [1/]
Acerola	6.0	Guava	7.7
Apple	11.5	Honeydew melon	9.6
Apricot	11.7	Kiwi	15.4
Banana	22.0	Lemon	4.5 [2/]
Blackberry	10.0	Lime	4.5 [2/]
Blueberry	10.0	Loganberry	10.5
Boysenberry	10.0	Mango	13.0
Cantaloupe Melon	9.6	Nectarine	11.8
Carambola	7.8	Orange	11.8 [3/]
Carrot	8.0	Papaya	11.5
Casaba Melon	7.5	Passion Fruit	14.0
Cashew (Caju)	12.0	Peach	10.5
Celery	3.1	Pear	12.0
Cherry, dark, sweet	20.0	Pineapple	12.8
Cherry, red, sour	14.0	Plum	14.3
Crabapple	15.4	Pomegranate	16.0
Cranberry	7.5	Prune	18.5
Currant (Black)	11.0	Quince	13.3
Currant (Red)	10.5	Raspberry (Black)	11.1
Date	18.5	Raspberry (Red)	9.2
Dewberry	10.0	Rhubarb	5.7
Elderberry	11.0	Strawberry	8.0
Fig	18.2	Tangerine	11.8 [3/]
Gooseberry	8.3	Tomato	5.0
Grape	16.0	Watermelon	7.8
Grapefruit	10.0 [3/]	Youngberry	10.0
Guanabana (soursop)	16.0		

[1/] Indicates Brix value unless other value specified.

[2/] Indicates anhydrous citrus acid percent by weight.

[3/] Brix values determined by refractometer for citrus juices may be corrected for citric acid.

Procedure to determine the ounces of creditable juice

The Sucrose Conversion Table in the AIM Inspection Series, Technical Procedures Manual contains the pounds solids/gallon and the weight/gallon in air at 20° C for a wide range of Brix readings.

The five steps to determine if the ounces of single strength creditable juice declared is accurate are as follows:

Step 1. Convert the pounds of juice concentrate to gallons by dividing the pounds of concentrate in the formula by the weight/gallon in air at 20° C.

$$\frac{\text{pounds of juice concentrate}}{\text{weight/gallon in air at 20° C}} = \text{gallons of juice concentrate}$$

Step 2. Determine the product fold by dividing the pounds solids/gallon corresponding to the Brix value of the concentrated juice by the pounds solids/gallon corresponding to the Brix value of single strength juice (according to FDA established single strength Brix values, as shown above.

$$\frac{\text{pounds solids/gallon (concentrate)}}{\text{pounds solids/gallon (single strength)}} = \text{fold}$$

Step 3. Determine the gallons of reconstituted juice by multiplying the gallons of juice concentrate by the fold.

gallons of juice concentrate × fold = gallons reconstituted single strength juice

Step 4. Determine the percent of creditable juice by dividing the gallons of reconstituted juice by the total gallons concentrated drink base.

$$\frac{\text{gallons reconstituted juice}}{\text{total gallons concentrated drink base}} = \text{percent creditable juice}$$

Step 5. Determine the ounces of creditable juice in one serving of the product by multiplying the serving size by the percent creditable juice.

serving size × percent creditable juice = ounces of creditable juice/serving

Examples of product formulation sheets and computations

Grape Juice Drink Base

Product Formulation Sheet:

Formulation Ingredients	Pounds of Ingredients in Batch Size Formula
Grape Concentrate (68 Brix)	5218.0
High fructose Corn Syrup	3966.0
Citric Acid	28.9
Ascorbic Acid	20.4
Water	1241.0
Base Total	**10474.3**

Concentrated Juice – 68.0° Brix; weight per gallon - 11.130; pounds solids per gallon - 7.568
Standard for single Strength juice is 16.0° Brix; pounds solids per gallon - 1.419
Batch size: 5000 gallons reconstituted.

Calculations:

1. 5218.0 divided by 11.130 = 468.823 (gal. juice concentrate)

2. 7.568 divided by 1.419 = 5.333 (fold)

3. 468.823 multiplied by 5.333 = 2500.233 (gal. reconstituted single strength juice)

4. 2500.233 divided by 5000 = 0.50004 (percent creditable juice)

5. 4 oz. serving multiplied by 0.50004 = **2.0001** (ounces creditable juice per serving)

Meets label declaration of ¼ cup (2 fluid ounces) of single strength juice.

Frozen Orange Juice Drink Bar

Product Formulation Sheet:

Formulation Ingredients	Pounds of Ingredients in Batch Size Formula
Water	72.4
Orange Juice Concentrate (58 Brix)	15.3
Sugar	9.6
Corn Syrup Solids	1.9
Guar Gum	0.2
Citric Acid	0.1
Natural Orange Flavor	0.5
Total	**100.0**

Concentrated Juice – 58.0° Brix; weight per gallon - 10.630; pounds solids per gallon - 6.165
Standard for single Strength juice is 11.8 Brix; solids per gallon - 1.029 lbs.
Batch size: 11.5 gallons

Calculations:

1. 15.3 divided by 10.630 = 1.439 (gal. juice concentrate)

2. 6.165 divided by 1.029 = 5.991 (fold)

3. 1.439 multiplied by 5.991 = 8.621 (gal. reconstituted single strength juice)

4. 8.621 divided by 11.5 = 0.749 (percent creditable juice)

5. 3 oz. serving multiplied by 0.749 = **2.247** oz. (ounces creditable juice per serving)

Meets label declaration of ¼ cup (2 fluid ounces) of single strength juice.

Orange Naturally Flavored Dessert (formula includes 20% overrun)

Product Formulation Sheet:

Formulation Ingredients	Pounds of Ingredients in Batch Size Formula
Water	4,160.529
Orange Juice Concentrate (65 Brix)	908.158
High Fructose Corn Syrup	631.900
Natural Orange Flavor	20.004
Citric Acid	15.000
Ascorbic Acid	5.400
Guar Gum	5.000
Total	**5,745.991**

Concentrated Juice – 65.0° Brix; weight per gallon - 10.977; pounds solids per gallon - 7.135
Standard for single Strength juice is 11.8 Brix; pounds solids per gallon - 1.029.
Batch size: 950 gallons

Calculations:

1. 908.158 divided by 10.977 = 82.732 (gal. juice concentrate)

2. 7.135 divided by 1.029 = 6.934 (fold)

3. 82.732 multiplied by 6.934 = 573.664 (gal. reconstituted single strength juice)

4. 573.664 divided by 950 = 0.604 (percent creditable juice)

5. 4.00 oz divided by (1 plus 0.20) = 3.33 oz. *Volume of product divided by 1 plus overrun equals the volume of the serving size of the mix without the overrun.*

6. 3.33 oz. serving multiplied by 0.604 = **2.01** (ounces creditable juice per serving)

Meets label declaration of ¼ cup (2 fluid ounces) of single strength juice.

Checking the Finished Product

The finished product must be analyzed and examined for quality and non-quality factors. The AIM Inspection Series, General Procedures Manual, Procedures for Completing Score Sheets and Tally Sheets provides instructions for recording the appropriate descriptive terms for quality factors related to products that are not covered by a U.S. Standard for Grades. For any additional questions regarding acceptance criteria, please contact your supervisor.

The minimum information to be included on the completed score sheet can vary depending on the product inspected. Please consult your supervisor for product specific instructions. Two completed examples are shown as guides on page 23 and page 24.

A. Fluid Measure

The CN labeling program requires that 50 percent juices and juice drink products be labeled in terms of liquid measure. In determining the net volume (or fluid measure), determine the net weight as usual and convert the avoirdupois ounces to fluid ounces by using the following formula:

$$\frac{\text{Avoirdupois Ounces} \times 0.9614}{\text{Specific Gravity of Product}} = \text{Fluid Ounces}$$

If a refractometer is not available or it is inconvenient to determine the specific gravity for CN drinks, a suitably sized, accurate volumetric cylinder may be used to measure fluid ounces.

The Federal Food and Drug Administration labeling regulations require frozen products that are sold and consumed in a frozen state to declare the volume of the product when the product is at the frozen temperature. Examples of 50 percent juice products impacted by this regulation include a frozen sherbet, yogurt, and a frozen juice bar/snack/or dessert. To verify total fluid volume declarations for these products an ice water displacement method is used.

The equipment and procedures for determining fluid measure by ice water displacement is explained in the "Ice Water Displacement (Fluid Measure)" section.

A diagram of a displacement vessel and the maximum allowable variation (MAV) allowed per unit to comply with the National Bureau of Weights and Measures is shown at the end of this section. Average net contents of all sample units in a lot shall meet the declared fluid ounces shown on the label.

REPRODUCE LOCALLY. *Include form number and revision date on all reproductions.* **SHEET 1 OF 1 SHEETS**

U.S. DEPARTMENT OF AGRICULTURE
AGRICULTURAL MARKETING SERVICE

SCORE SHEET FOR:
TROPICAL PUNCH JUICE DRINK CONCENTRATE

CONTRACT NO. / PURCHASE OORDER NO.

CERTIFICATE NO. | NO. CASES

NAME AND ADDRESS OF APPLICANT
Terrific Juices, Inc.
Centerville, VA

NO., SIZE AND KIND OF CONTAINER
4/125 fl. oz. plastic bottles with screw on plastic caps.

LABEL
Terrific Tropical Punch Juice Drink Concentrate Naturally flavored and Colored. Net contents 125 fl. oz. Distributed by Jolly Juices, Tempe, AZ 76504.

CONTAINER MARK OR IDENTIFICATION														
	PRIMARY	41711M	41711M	41711M	41711M	41711M	41711M							
	CASE													
Batch		1	1	1	2	2	2							
Net contents (fluid ounces)		126.8	125.8	125.5	125.7	126.4	125.8							
Concentrated Drink:														
Brix Value (degrees)		58.6	58.6	58.6	58.7	58.7	58.7							
Total Acidity (Citric % by weight)		1.11	1.11	1.11	1.09	1.09	1.09							
Brix Value Acid Ratio		52.8	52.8	52.8	53.9	53.9	53.9							
Reconstitutes Properly		Yes	Yes	Yes	Yes	Yes	Yes							
FACTORS	**SCORE POINTS**													
		RECONSTITUTED DRINK:												
		COLOR	G	G	G	G	G	G						
		DEFECTS	PF	PF	PF	PF	PF	PF						
		FLAVOR	G	G	G	G	G	G						
~~TOTAL SCORE~~	~~100~~													
~~U. S. GRADE~~ / MEETS (M) OR FAILS (F)			M	M	M	M	M	M						

REMARKS
(G) = Good (PF) = Practically Free
Meets Child Nutrition Labeling requirements for a 50% juice drink.

Lot as a whole U. S. Grade N/A or MEETS or FAILS (Circle One).

OFFICIAL USDA INSPECTOR (Print and Sign Name)
Connie Tibbetts *Connie Tibbetts*

DATE
January 29, 2011

FORM FV-364E 1/ Limiting Rule 2/ Partial Limiting Rule *EXAMPLE - Score Sheet for: Tropical Punch Juice Drink Concentrate*

REPRODUCE LOCALLY. *Include form number and revision date on all reproductions.* **SHEET 1 OF 1 SHEETS**

U.S. DEPARTMENT OF AGRICULTURE
AGRICULTURAL MARKETING SERVICE

SCORE SHEET FOR:
Quiescently Frozen Confection

CONTRACT NO. / PURCHASE OORDER NO.: 067177
CERTIFICATE NO.: _____
NO. CASES: 320

NAME AND ADDRESS OF APPLICANT
Mr. Freeze, Inc.
Cold Water, WA

NO., SIZE AND KIND OF CONTAINER
96/Net 4.0 Fl. Oz. (118) plastic cups with lithographed foil heat sealed lids.

LABEL
Mario's Sherbet Raspberry Flavored. Net contents 4 fl. oz. Distributed by Mr. Freeze, Cold Water, WA 07547.Plant # 24-974

CONTAINER MARK OR IDENTIFICATION															
	PRIMARY	012900C	012900C	012900C	012900C	012900C	012900C								
	CASE	012900C	012900C	012900C	012900C	012900C	012900C								
Time		2201	2235	2303	2340	0012	0045								
Net contents (fluid ounces)		4.05	4.10	4.12	4.00	4.27	4.05								
Brix Value (degrees)		30.5	30.8	30.7	30.5	30.5	30.5								
FACTORS	**SCORE POINTS**														
		COLOR	G	G	G	G	G	G							
		DEFECTS	PF	PF	PF	PF	PF	PF							
		FLAVOR	G	G	G	G	G	G							
~~TOTAL SCORE~~	~~100~~														
~~U. S. GRADE~~ / MEETS (M) OR FAILS (F)			M	M	M	M	M	M							

REMARKS
(G) = Good (PF) = Practically Free
Meets Child Nutrition Labeling requirements for a 50% juice drink.

Lot as a whole U. S. Grade N/A or MEETS or FAILS (Circle One).

OFFICIAL USDA INSPECTOR (Print and Sign Name)
Matthew King *Matthew King*

DATE
January 30, 2011

FORM FV-364E 1/ Limiting Rule 2/ Partial Limiting Rule *EXAMPLE - Score Sheet for: Quiescently Frozen Confection*

ICE WATER DISPLACEMENT (FLUID MEASURE)

EQUIPMENT

1. Scale – either mechanical or digital.

2. Displacement Vessel – physical dimensions large enough to contain the commodity. One design that can be constructed of clear plastic is shown below. Its advantages are that the interior baffle reduces wave action when the item is inserted into the vessel, and the downward angle of the overflow spout reduces dripping. Other designs may be used.

3. Graduated Cylinder – larger than the labeled volume.

4. Thin wire, clamp, or tongs.

5. Ice water maintained at 33 degrees F or below.

6. Freezer or ice chest and dry ice to maintain product 0 degrees F or lower.

7. Indelible marker (for products on a stick only).

8. Thermometer.

PROCEDURE

1. Place the sample in the freezer or ice chest until ready to test. Remove packages from the freezer one at a time.

2. Fill the displacement vessel with ice water until the water overflows the spout. Allow to sit until dripping stops. Place the graduated cylinder underneath the spout. Raise the displacement vessel as necessary so that the cylinder fits beneath the spout.

3. Determine and record sample unit gross weight.

4. According to the type of item, prepare the product as follows:

    a. Product on a stick

    Mark the stick with the indelible marker at the point to which the pop will be submerged in the ice water.

b. Product in a cup

Remove the cap from the cup. After the cup and contents have been submerged, the product will be removed from the cup to determine the volume of the cup alone.

5. Carefully submerge each item until it is completely below the liquid level of the ice water in the displacement vessel.

a. Product on a stick

Use a clamp, tongs, or your fingers to hold the stick and submerge the pop to the level marked in step 4.a.

b. Product in a cup

Skewer the item with the thin wire or form a loop on the end of the wire to push the cup completely below the liquid level.

6. Subtract the volume of the stick or cup from the total water volume of the product.

a. Product on a stick

Melt the ice pop off the stick or sticks. Submerge the stick or sticks to the line marked in step 4.a. Record the volume of water displaced. This is the volume of the stick.

b. Product in a cup

Remove the item from the cup. Rinse the cup and then carefully submerge it. (Small pinholes made in the base of the cup makes submersion easier.) Record the volume of the water displaced into the graduated cylinder. This is the volume of the cup.

Displacement Vessel for CN Novelty Products

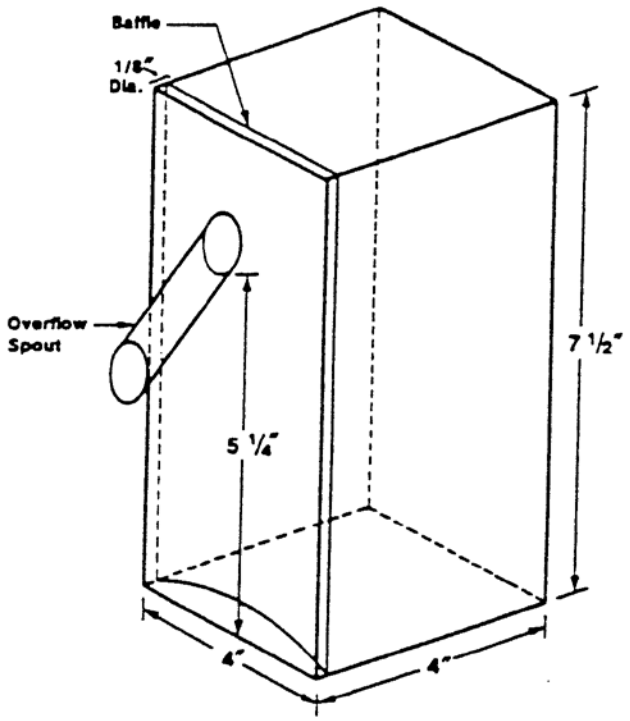

Maximum Allowable Variation (MAV's) for an individual package labeled by volume. The net content is based on FDA and PPD requirements that the average should meet and no unreasonable shortage is allowed.

Labeled Quantity in Fl. Oz.	Liquid MAV (fl. oz)
0.75 to 2.25	0.13
2.26 to 4.25	0.19
4.26 to 5.75	0.25
5.76 to 7.50	0.31

Samples and records to National Office

On at least an annual basis, supervisors shall send one sample unit (institutional size containers) of each product to the National Office in Washington, DC for review. If containers consist of individual portion size servings, submit eight sample units of each flavor for the respective product. The Review Program Sample Submittal Sheet (which may be found in the AIM Inspection Series, General Procedures Manual) will be used when submitting samples. Include a copy of the score sheet that covers the lot evaluated and a copy of the computations that show compliance with the CN labeling program.